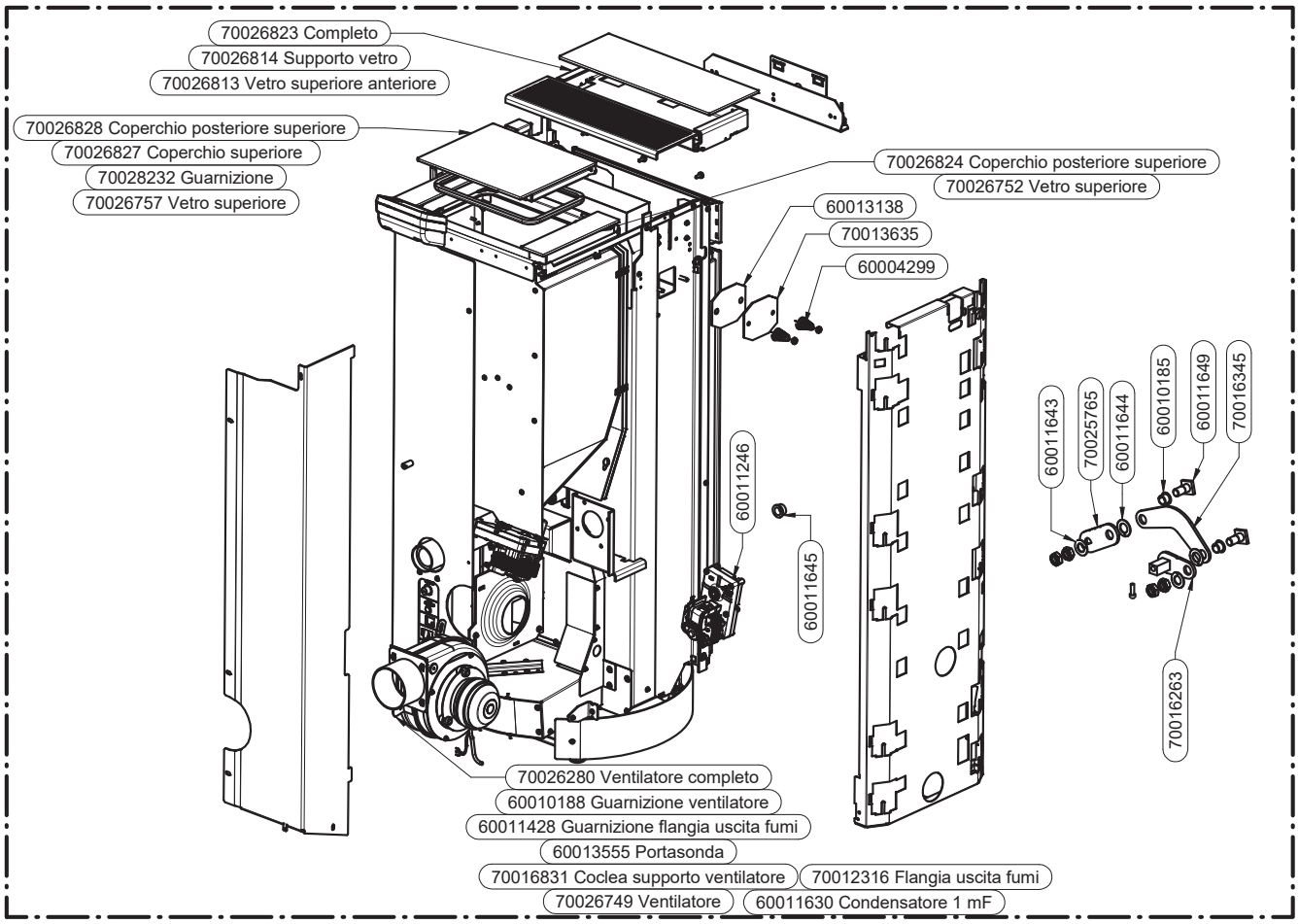

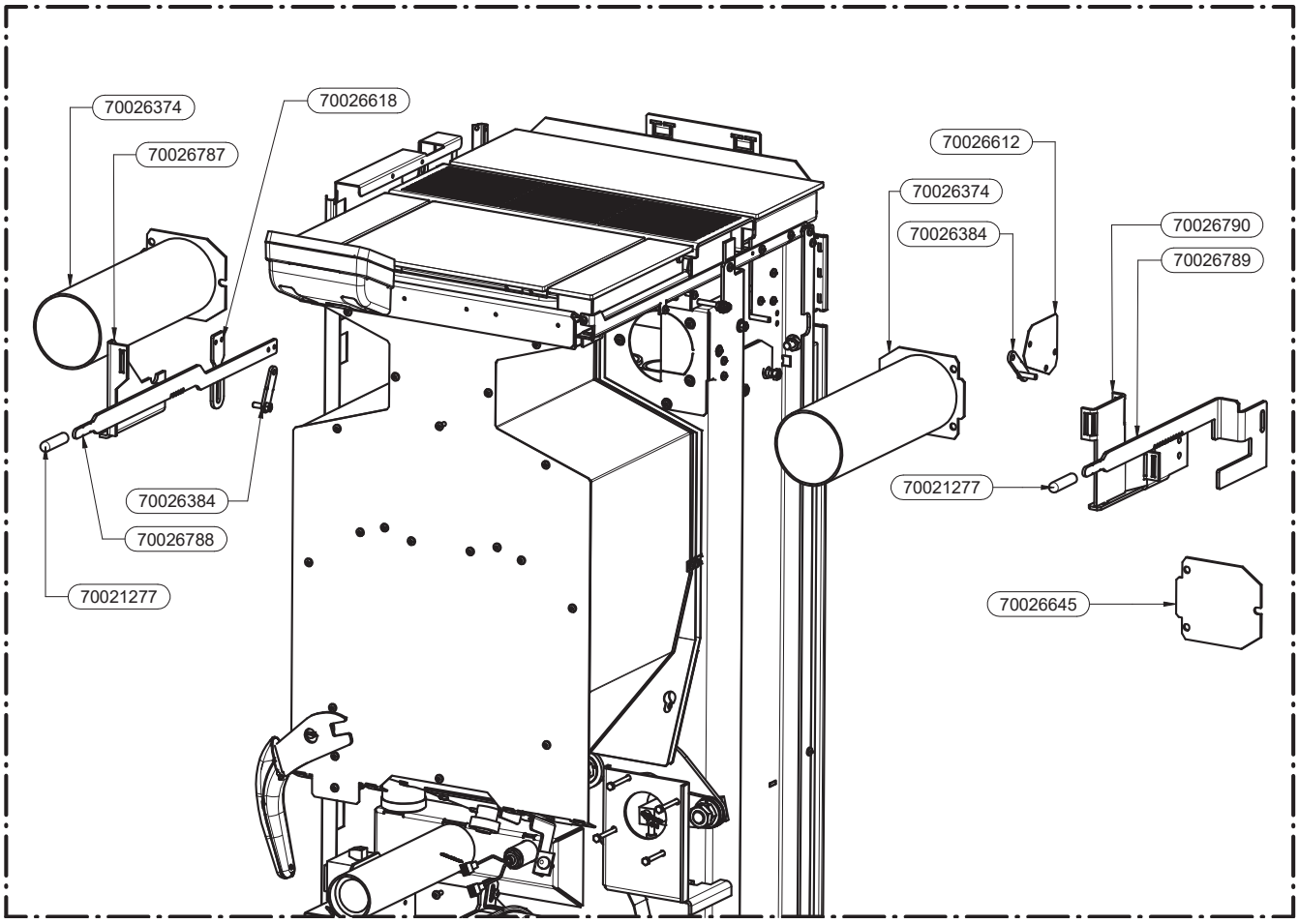

THERMOROSSI
PELLET, WOOD & SUN TECHNOLOGIES